BenQ EX271U
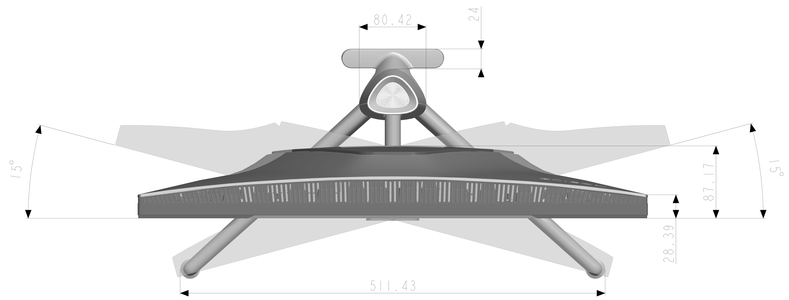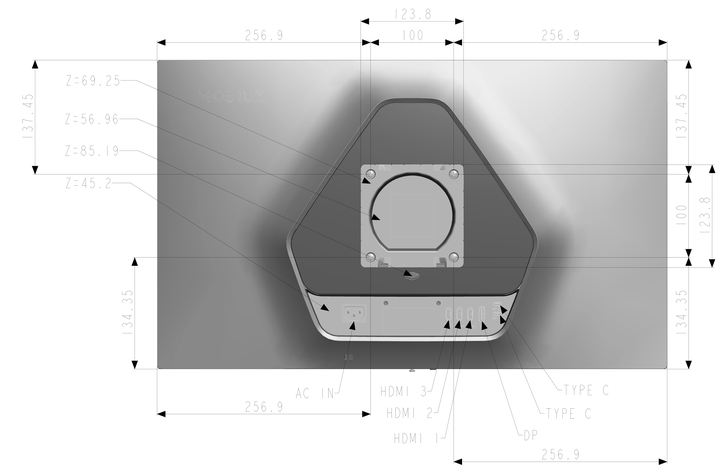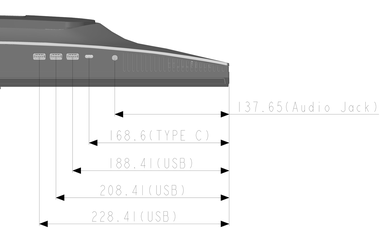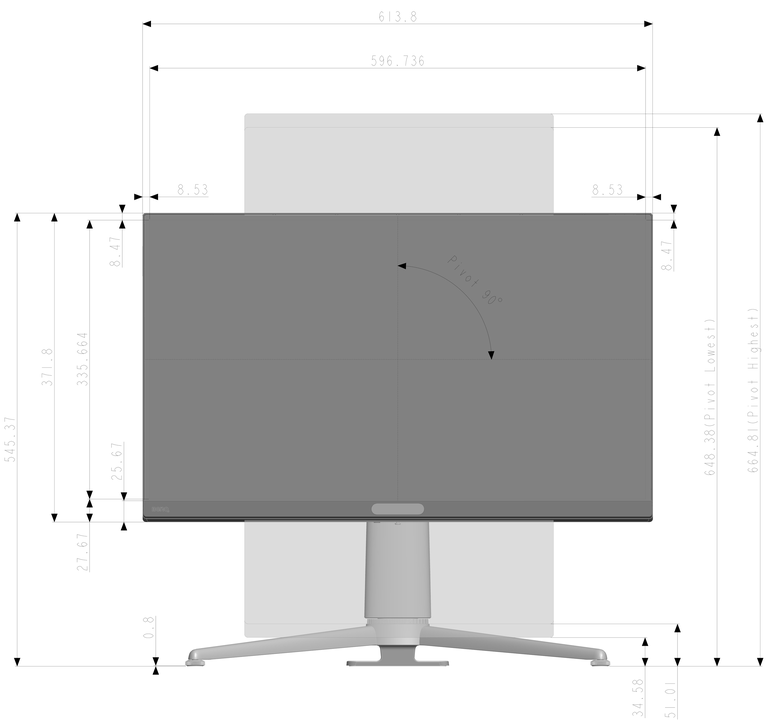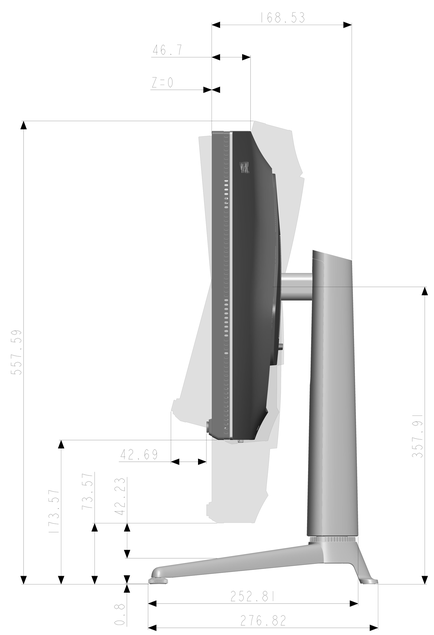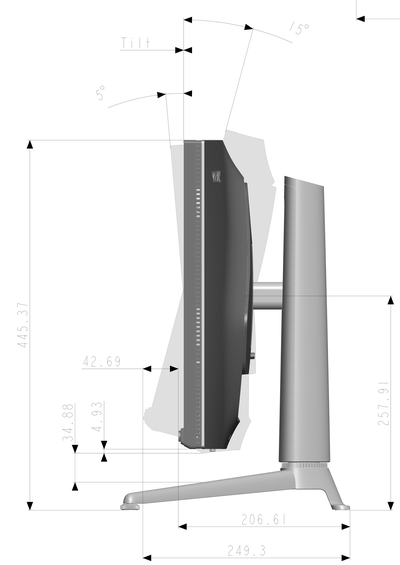
Unit: mm
Dimension: Norminal
Drawing: Not to scale