USER MANUAL

27" 2K QHD LED Monitor

L27HAS2K

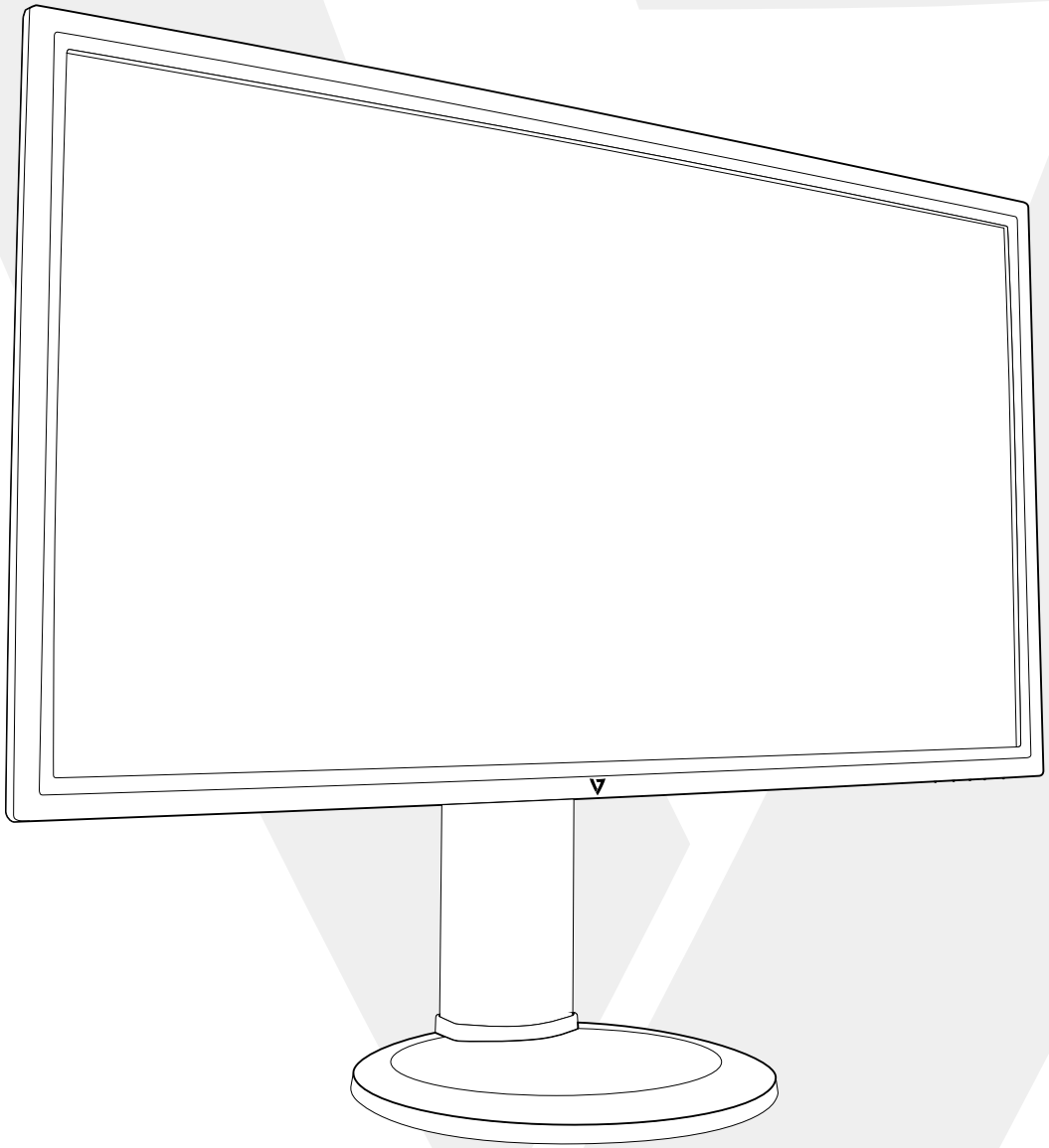

TABLE OF CONTENTS

1 Getting Started

2 Control Panel/ Back Panel

3 On Screen Display

4 Technical Specs

5 Troubleshooting

6 Safety Info & FCC warning

1 GETTING STARTED

Package includes

- AC Power cord
- DisplayPort cable
- Quick start guide

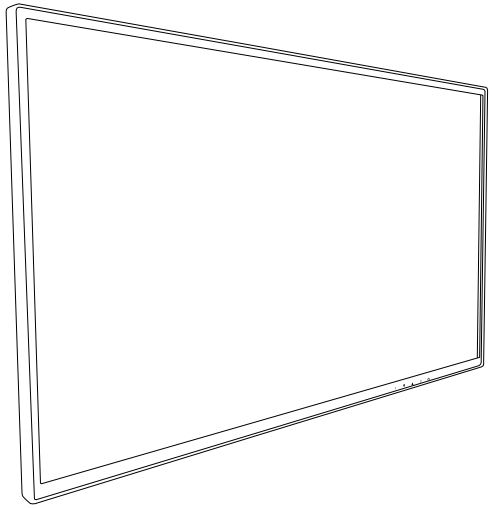

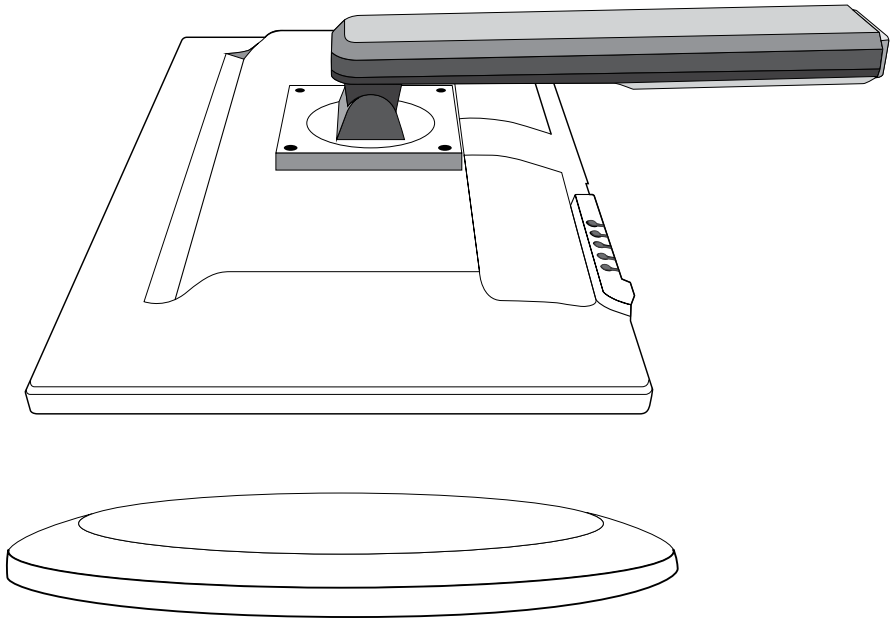

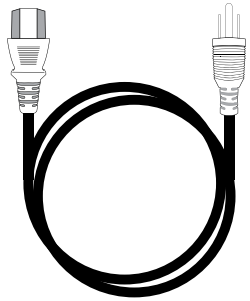

AC Power Cord

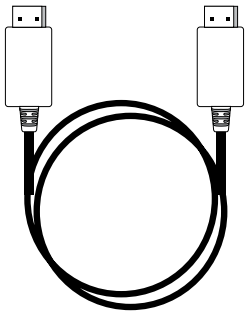

DisplayPort Cable

Installation

1. Slide on Cable Holder and rotate arm

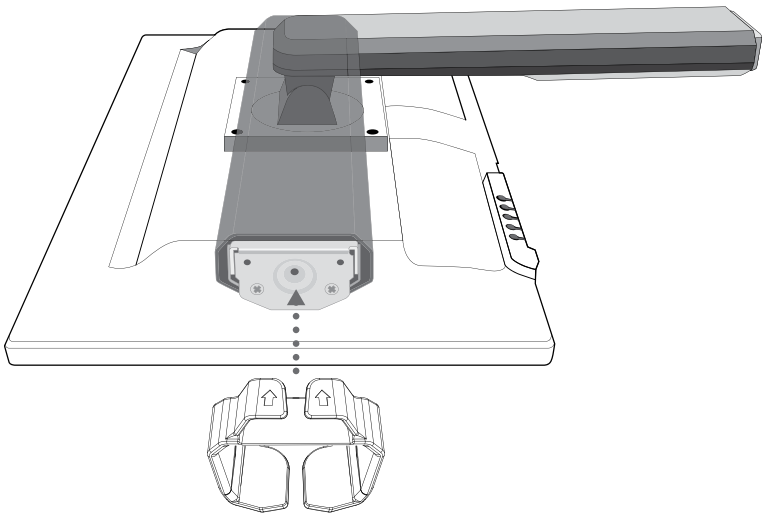

2. Screw on base

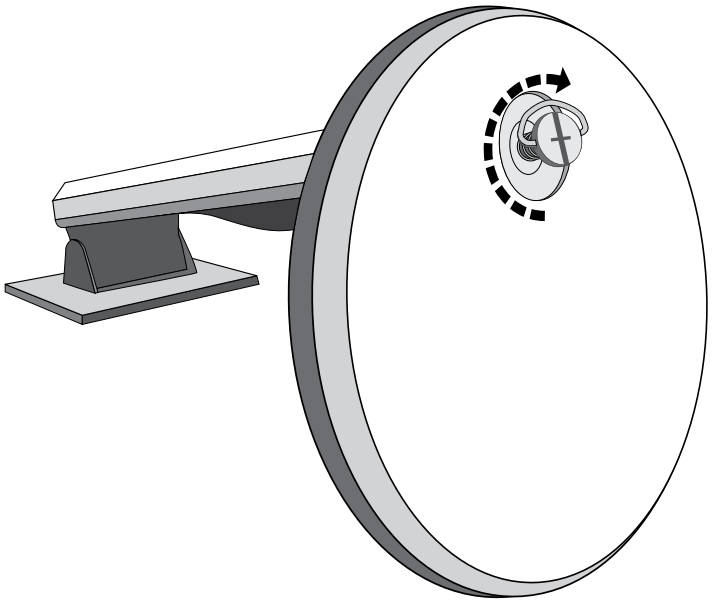

3. Connect Video Cable, Connect Power Cord

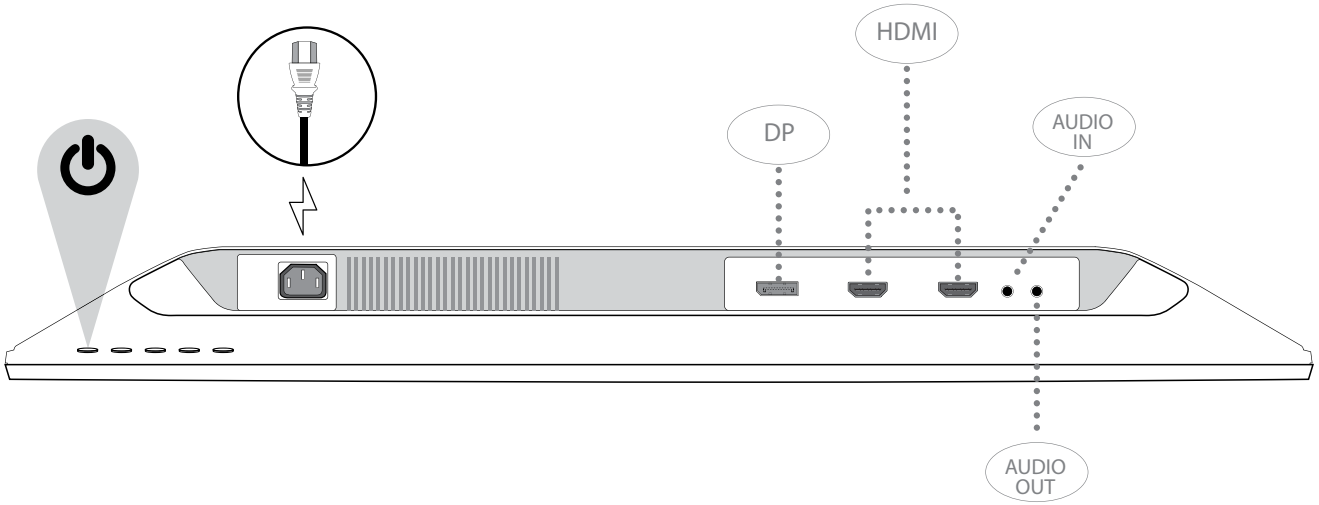

4. Power on Computer and Monitor

Height Adjustment

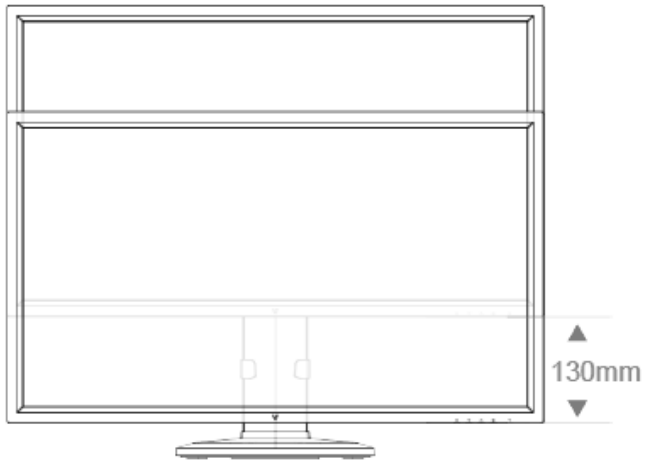

Tilt

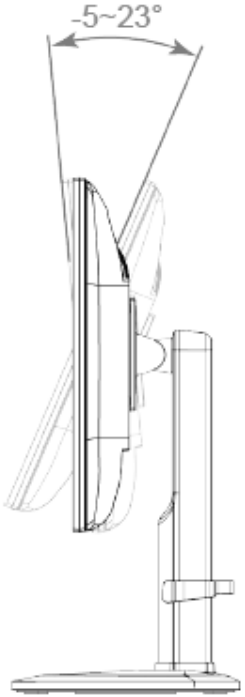

Swivel

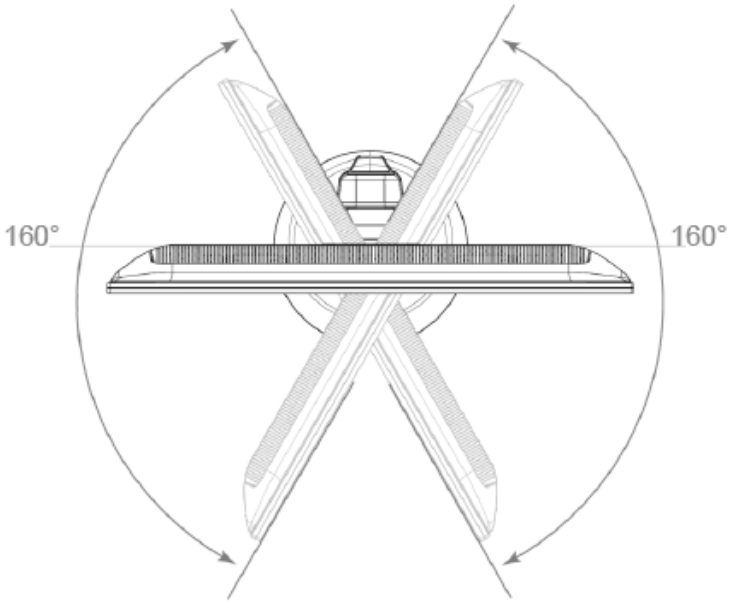

Pivot

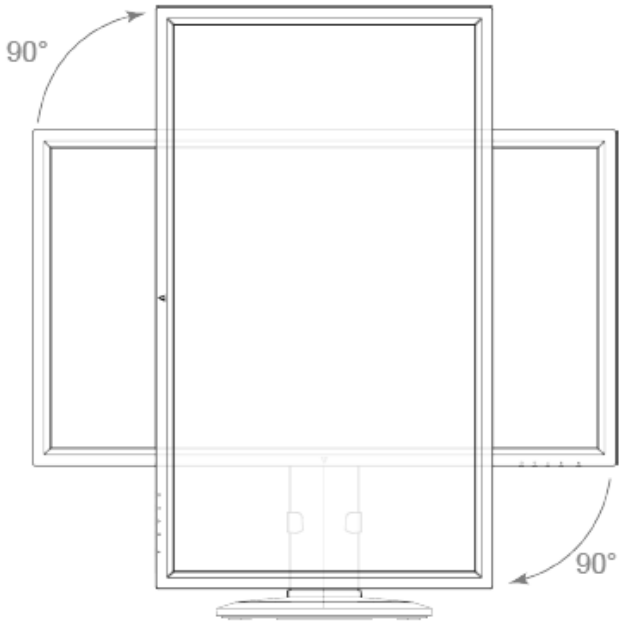

Control Panel/Back Panel

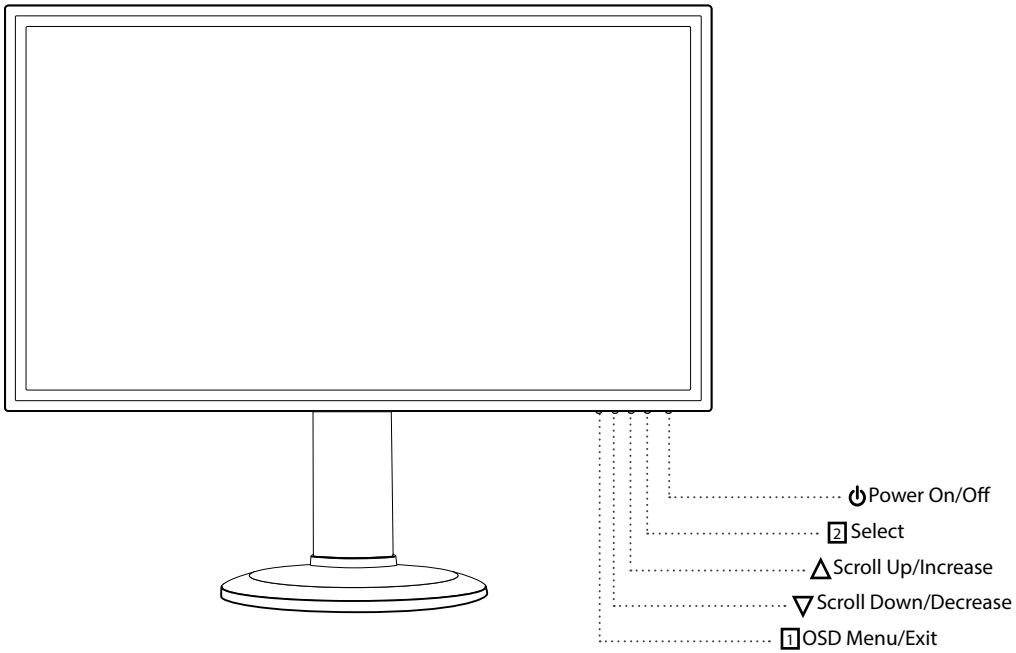

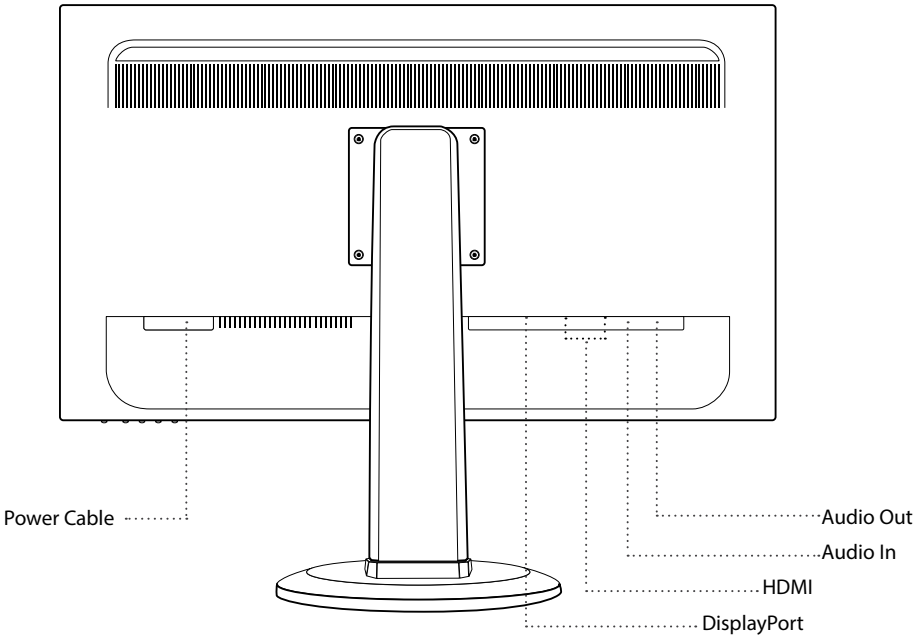

Using On Screen Display (OSD) Functions

Main Menu

Button Function		
	Input Source	**When Input Select is pressed, change Input signal to HDMI 1, HDMI 2, DisplayPort, and Auto**
	Picture	**To manually adjust the Brightness, Contrast, Over Drive, and ECO Mode of screen image**
		Brightness: To adjust the luminance of the video. ▲ increase brightness, ▼ decrease brightness.
		Contrast: To adjust the foreground white level of screen image. ▲ increase contrast, ▼ decrease contrast.
		Over Drive: Allows the user to change the Over Drive strength. Improve the quality of the motion pictures. Press ▲ or ▼ key to adjust the Over Drive strength in three levels
		ECO: Allows the user to change the ECO mode. Contrast, Brightness and DCR adjustment will be disabled when ECO is active. Press ▲ or ▼ key to adjust the ECO Mode in three levels
	Audio	**To adjust the audio functions.**
		Volume: To adjust the volume of speaker output.
		Mute: To turn the Mute ON/OFF.
		Audio Input: Choose source line-in or HDMI

ON SCREEN DISPLAY

Button Function		
	Color	**Color modes: cool, normal, warm and user color**
		User Define: Individual adjustments for red (R), green (G), blue (B). 1. Press button 2 to select the desired color. 2. Press ▲ or ▼ button to adjust selected color.
		Picture mode: Provides an optimum display environment depending on the contents displayed. It contains 5 user-selectable presets. • **Standard** is for general windows environment and monitor default setting. • **Game** optimized for PC game environment • **Video** optimized for movie and video environment • **Scenery** optimized for displaying outdoor scenery images. • **Text** optimized for text editing and viewing in a word processing environment
		Blue Light Reducer: Turn on/off BLR mode. If BLR mode is ON, Blue Light will be restricted Press ▲ or ▼ key to adjust the BLR mode strength in three levels
	Language	**Allows user to choose from available languages**
	OSD Settings	**To manually adjust the Horizontal and Vertical OSD Position, Transparency and OSD Time Out**
		Horizontal: to horizontally adjust the OSD position **Vertical:** to vertically adjust the OSD position **H. Position:** ▲**:** move screen to the right, ▼**:** move screen to the left. **V. Position:** ▲**:** move screen up, ▼: move screen down.
		Transparency: to change the transparency of OSD window
		OSD Time Out: to automatically turn off On Screen Display (OSD) after a preset period of time.
	Setup	**To set up Picture Format, Power indicator, Information and Memory Recall**
		Picture Format: To select the video mode from Wide Screen or 4:3
		Power Indicator: To adjust power indicator light ON/OFF
		Information: To display the information, regarding the current input signal coming from the graphic card in your computer.
		Memory Recall: To recall factory settings for Video & Audio controls.

Technical Specification

LCD Panel	68.6 cm (27") TFT
Power Management	VESA DPMS compatible Off Mode, < 0.5 W
Displayable Resolution	QHD 2560 x 1440 max. Vertical Frequency 60Hz max.
Pixel Dimension	0.2331 x 0.2331 mm
LCD Display Color	1.073 B colors
Tilt	-5°~23° (±2°)
Active Display Area	596.74 mm x 335.66 mm
Temperature	Operating: 5°C ~ + 40°C Storage: -20°C ~ + 60°C
Compliance	CE, EnergyStar, FCC
Power	Input Voltage AC100-240 V
Speaker	3W x 2

No power

- Make sure AC power cord is securely connected to the power adapter and the power supply is firmly connected to the monitor.
- Plug another electrical device into the power outlet to verify that the outlet is supplying proper voltage.
- Make sure all signal cables are installed.

Power on but no screen image

- Make sure the video cable supplied with the monitor is tightly secured to the video output port on back of the computer. If not, tightly secure it.
- Adjust brightness.

Wrong or abnormal colors

- If any colors (red, green, blue) are missing, check the video cable to make sure it is securely connected. Loose or broken pins in the cable connector could cause an improper connection.
- Connect the monitor to another computer.

Safety Precautions

This monitor is manufactured and tested on a ground principle that a user's safety comes first. However, improper use or installation may result danger to the monitor as well as to the user. Carefully go over the following WARNINGS before installation and keep this guide handy.

WARNINGS

- This monitor should be operated only at the correct power sources indicated on the label on the rear end of the monitor. If you're unsure of the power supply in your residence, consult your local dealer or power company.
- Do not try to repair the monitor yourself as it contains no user-serviceable parts. The monitor should only be repaired by a qualified technician.
- Do not remove the monitor cabinet. There is high-voltage parts inside that may cause electric shock to human bodies, even when the power cord is disconnected.
- Stop using the monitor if the cabinet is damaged. Have it checked by a service technician.
- Put your monitor only in a clean, dry environment. Unplug the monitor immediately if gets wet and consult your service technician.
- Always unplug the monitor before cleaning it. Clean the cabinet with a clean, dry cloth. Apply non-ammonia based cleaner onto the cloth, not directly onto the glass screen.
- Keep the monitor away from magnetic objects, motors, TV sets, and transformer.
- Do not place heavy objects on the cable or power cord.
- Due to safety concerns, if the VESA mounting kit is purchased separately, please make sure the mounting kit is UL-Listed, and replaceable only by service personnel.

FCC RADIO FREQUENCY INTERFERENCE STATEMENT
WARNING: (FOR FCC CERTIFIED MODELS)

This monitor has been tested and found compliant with the limits for a Class B digital device, pursuant to part 15 of the FCC Rules. These limits are designed to provide proper protection against harmful interference to a residential installation. This monitor generates, uses, and can radiate radio frequency energy. Harmful interference to radio communication may be led as a result if it's not properly installed and used. However, there is no guarantee that interference will not occur in a particular installation. If this monitor does cause serious interference to radio or television reception, resetting the monitor may determine it. Moreover, users are encouraged to correct interference by doing one or more of the following:

- Reorient or relocate the receiving antenna.
- Move the monitor and the receiver further away from each other.
- Connect the monitor into an outlet on a circuit different from that to which the receiver is connected.
- Consult your local dealer or an qualified technician.

FCC Warning:
To assure a continued FCC compliance, a user must use a grounded power supply cord and the provided shielded video interface cable with bonded ferrite cores. Also, any unauthorized changes or modifications to this monitor would void the user's authority to operate this device.
Each country in the European Union should have its collection centers for electrical and electronic equipment recycling. For information about your recycling drop off area, please contact your related electrical and electronic equipment waste management authority or the retailer where you bought the product.
Note: If necessary, shielded interface cables and AC power cord must be used to meet the emission level limits.

According to WEEE regulation, this monitor can't be handled as normal trash in Europe when it is out of usage. Please refer to the recycle information from our website to handle it.

CAN ICES-3(B)/NMB-3(B)
This device complies with Part 15 of the FCC Rules.
Operation is subject to the following two conditions:
(1) this device may not cause harmful interference, and
(2) this device must accept any interference received, including interference that may cause undesired operation.

ENERGY STAR