D

USER MANUAL

TITLE	Industrial Monitor / Monitor
MODEL NAME	IDS31-104
SERIAL NAME	IDS31-104-523DVA1E
Signature Date _____ _____ _____ _____ _____ _____	Prepared by Date
Please return 1 copy for our confirmation with your signature and comments	

TABLE OF CONTENTS

NO	ITEM	PAGE
Ⅰ	Overview	3
Ⅱ	General Description	4
Ⅲ	Electrical Specifications	5
1	Electrical Characteristics	5
2	Interface Connections	6~9
Ⅳ	OSD Function	10
Ⅴ	Environment Specifications	11
Ⅵ	Reliability	11
Ⅶ	Inspection Standard	12~14
Ⅷ	Accessory	15~20
Ⅸ	Mechanical Characteristics	21
Ⅹ	Packing	22

BSMI 甲類
警告使用者這是甲類資訊產品, 在居住的環境中使用時, 可能會造成射頻干擾, 在這種情況下, 使用者會被要求採取某些適當的對策.

警告 : 使用過度恐傷害視力
(1) 使用30分鐘請休息10分鐘。
(2) 2歲以下幼兒不看螢幕, 2歲以上每天看螢幕不要超過1小時。

Ⅰ. OVERVIEW

The IDS31-104-523DVA1E is designed 10.4 inch monitor

- Support the monitor with 800 × 600 resolution.
- Brightness - 230 cd/㎡ (without Touch)
- Contrast Ratio : 500:1

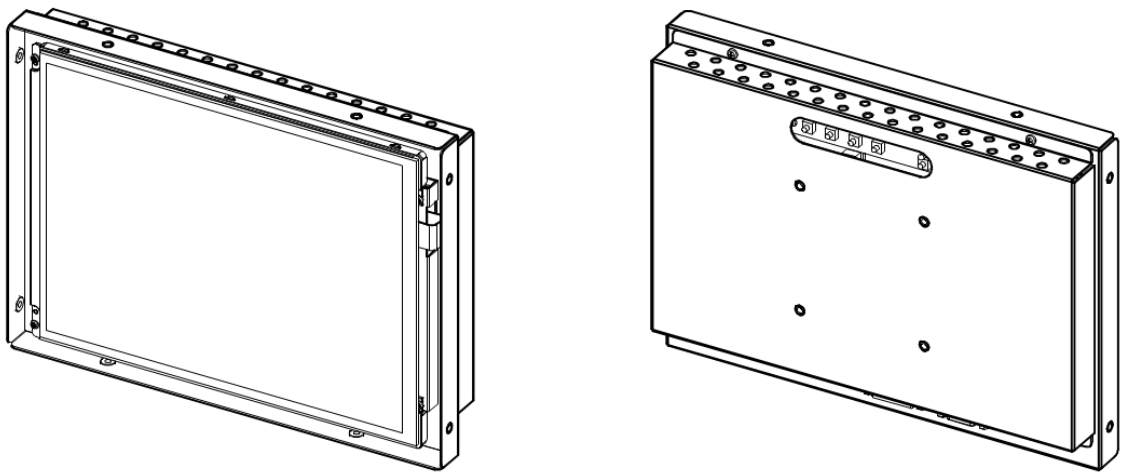

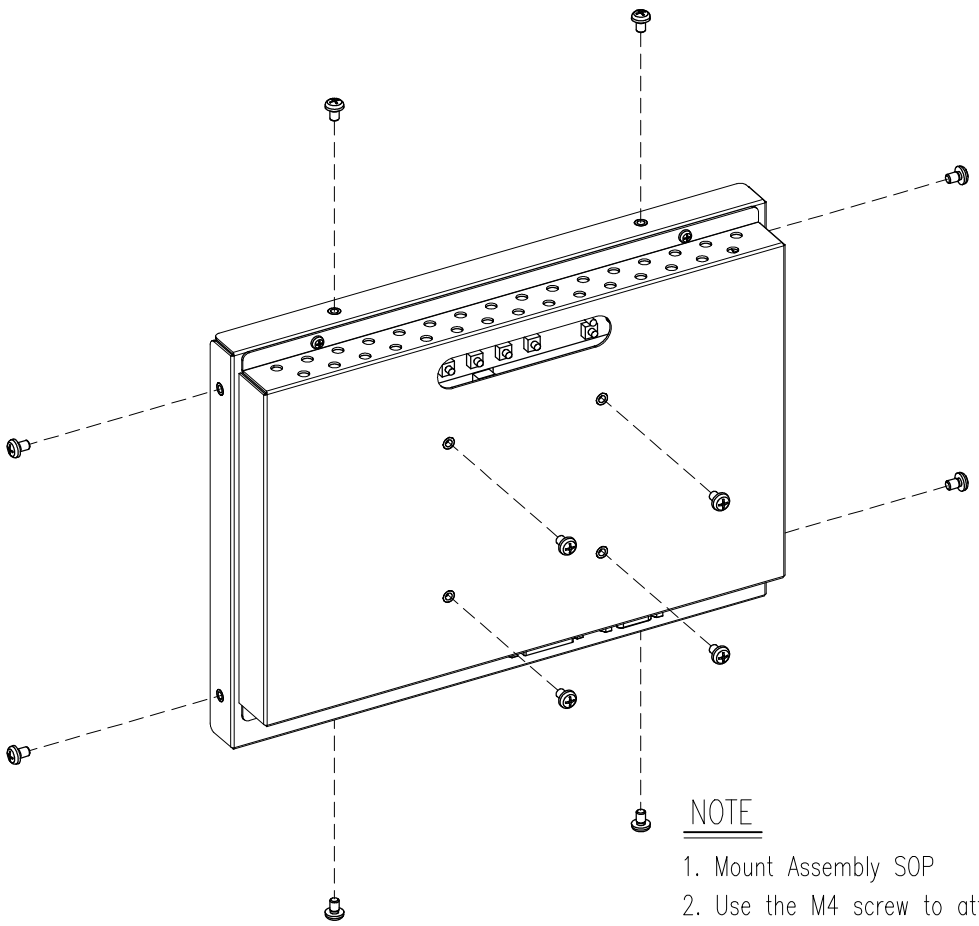

NOTE

1. Mount Assembly SOP
2. Use the M4 screw to attach ang tighten as follows.

Ⅱ. General Description

Display Type		TFT LCD Panel (10.4 inch) – G104SN03V5
Pixel Pitch		0.264(H)mm X 0.264(V)mm
Pixel Format		800 Hor. By 600 Ver. Pixels RGB vertical stripe
Display Colors		16.2M / 262K colors
Brightness		230 cd/㎡ (Typical)
Contrast Ratio		500 : 1 (Typical)
Response Time		35 ms (T_R + T_F)
Viewing Angle	Horizontal	160 ˚
	Vertical	130 ˚
Life Time		30,000 Hr (Typical)
Input Signal		Analog RGB, DVI-D
OSD Controls		Soft Power(On/Off), Menu, Select, Up, Down
Power Saving (LED Display)		VESA DPMS, On (Green), Stand-By (Green blinking), Suspend (Green blinking), Off
Dimension		262.0(H) x 194.0(V) x 40.3(D)
Weight		1.6kg
Operating Temp.		0℃ ~+50℃
Storage Temp.		-20℃ ~ +60℃

Ⅲ. Electrical Specifications

1-1. Electrical Characteristics

Power	DC Input Voltage		12VDC/ 3.5A ±10%	
	Standby power		1.0 W	
	Power consumption		6 W	
Analog	Video Signal	Type	Analog RGB	
		Gain Level	0.714 ± 5%	
		Input impedance	75ohm ± 5%(terminated)	
		Pixel frequency	Max. 165MHz	
		Resolution	Max. 800×600 / 60Hz	
	Input Sync Signal	Type	H/V, Separate only	
		Gain Level	TTL level (High ≥ 2.0V, Low ≤ 0.8V)	
		Polarity	Positive or Negative	
		Maximum Duty	Max. 25%	
		Frequency Range	Horizontal	31.43 ~ 88.8KHz,
			Vertical	56.25 ~ 75.03Hz
DVI	Differential output		150 ~ 1200 mVp-p	
	Input clock freq		20 ~ 135 MHz	

1-2 Board Block Diagram

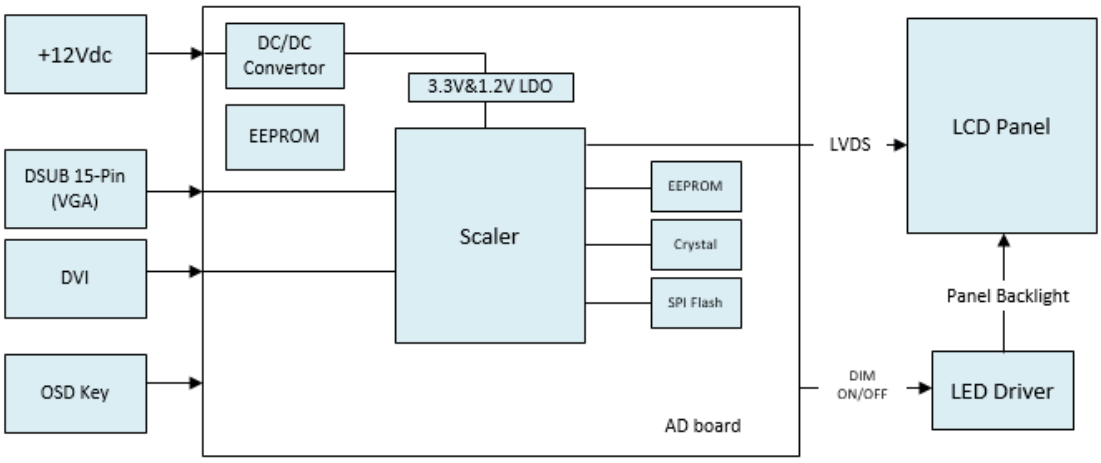

D

2. I/O Port (Interface Connections)

2-1. Analog RGB Pin Assignment

Connector	P/No.	Symbol	Description
VGA Input connector For 15P D-sub	1	Red	Red, analog input
	2	Green	Green, analog input
	3	Blue	Blue, analog input
	4	N.C	Not connected
	5	DGND	Digital ground
	6	Red GND	Ground for Red return
	7	Green GND	Ground for Green return
	8	Blue GND	Ground for Blue return
	9	N.C	Not connected
	10	DGND	Detect connector
	11	N.C	Not connected
	12	DDC Data	DDC Data
	13	H-sync	Horizontal sync, input
	14	V-sync	Vertical sync, input
	15	DDC Clk	DDC Clk

2-2. DVI Jack Pin Assignment

Connector	P/No.	Symbol	Description
DVI	1	RX2N	TMDS Data 2-
	2	RX2P	TMDS Data 2+
	3	GND	TMDS Data 2/4 Shield
	4	NC	TMDS Data 4-
	5	NC	TMDS Data 4+
	6	SCL-DVI-1	DDC Clock
	7	SDA-DVI-1	DDC Data
	8	VSYNC	Analog Vertical Sync
	9	RX1N	TMDS Data 1-
	10	RX1P	TMDS Data 1+
	11	GND	TMDS Data 1/3 Shield
	12	NC	TMDS Data 3-
	13	NC	TMDS Data 3+
	14	+5V Power	DVI+5V
	15	GND	Ground
	16	HPD	Hot Plug Detect
	17	RX0N	TMDS Data 0-
	18	RX0P	TMDS Data 0+

D

	19	GND	TMDS Data 0/5 Shield
	20	NC	TMDS Data 5-
	21	NC	TMDS Data 5+
	22	GND	TMDS Clock Shield
	23	RXCP	TMDS Clock +
	24	RXCN	TMDS Clock -
	C1	NC	Analog Red
	C2	NC	Analog Green
	C3	NC	Analog Blue
	C4	HSYNC	Analog Horizontal Sync

2-3. Input Signal format

Character / Mode	Pixel Freq.	Horizontal Timing				Vertical Timing			
		Sync Polar	Freq.	Total	Active	Sync Polar	Freq.	Total	Active
	MHz		KHz	Pixel	Pixel		Hz	Line	Line
640x480 @60Hz	25.175	-	31.47	800	640	-	59.94	525	480
800x600 @60Hz	40.000	-	37.88	1056	800	-	60.32	628	600

Sync : H/V Separated LVDS

2-4. Touch Glass / Touch Controller

5wire Resistive Touch	
Input Method	Pen : 110 g ↓ (Polyacetal) Finger: 110 g ↓ (Silicon rubber)
Light Transmittance	81% ↑ (550㎚ wavelength, According to JIS-K7105)
Operating Temperature	-20℃ ~ 70℃ Humidity 90% RH at max 35℃
Storage Temperature	-40℃ ~ 80℃ Humidity 90% RH at max 35℃
Relative Humidity	25 - 90% (Temperature: 20±2 ℃ / Humidity : 65 ± 5 % RH)

<FRONT VIEW>

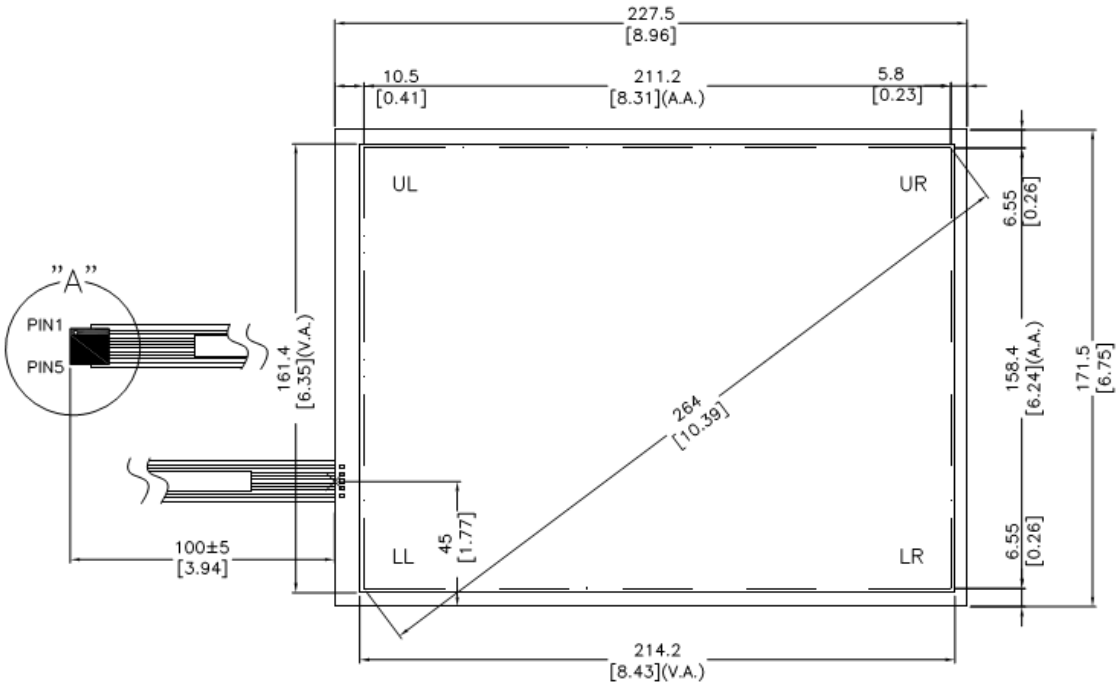

<NOTES>

1. GLASS THICKNESS : 1.8mm
2. GLASS CHARACTERISTIC : NORMAL
3. FILM CHARACTERISTIC : ANTI-GLARE
4. TOTAL THICKNESS : 2.2mm±0.1
5. LABEL TO BE ATTACHED TO FRONT SIDE OF TAIL

<A CROSS SECTION>

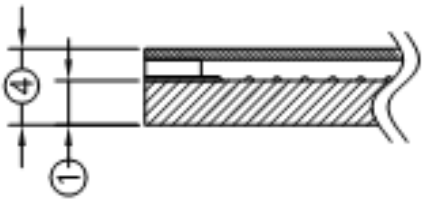

D

5wire Type Controller	
Circuit Board Dimension	20mm x 75mm (0.79inches x 2.95inches)
Power Requirements	D.C.+5V (100mA typical,50mV peak to peak maximum ripple and noise)
Operating Temperature	-25 to 85 ℃
Storage Temperature	-40 to 85 ℃
Relative Humidity	95% at 60 ℃, RH Non-condensing
Interface	USB: 1.1 Full Speed
Resolution	2048×2048 resolution
Report rate	USB: Max. 200 points/sec
Response time	Max. 20 ms
Attached Cable	USB: 180cm shielded cable with USB-A connector
Regulatory Approvals	FCC-B , CE
EMI	Unaffected by environmental EMI
Panel resistance	5 wire resistive model: 50 ~ 200 ohm (Pin to pin on same layer, Touch Resistance under 3k ohm)
Green Product	RoHS Compliant
MTBF	200,000 hrs

ETP-MB-MER4050UEBG-02 (5 wire control board)

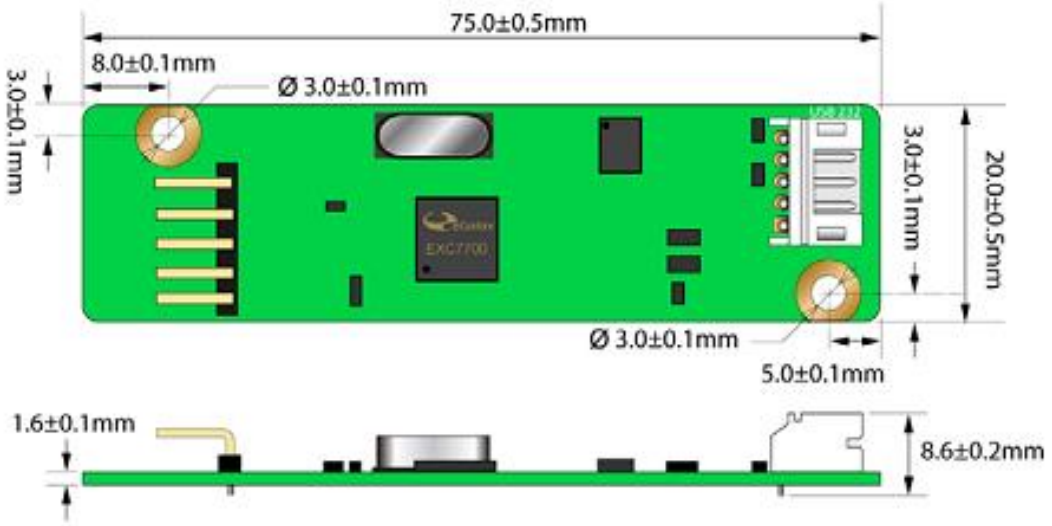

Ⅳ. OSD Function

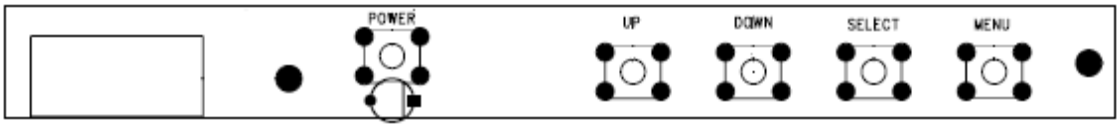

1) Button

Button	Function	Notes
Power	Power on/off button - Turn power on or off	
Menu	Main menu on/move button - Show OSD menu on the screen - Exit the main menu or submenu	
SLEECT	Menu off button - Submenu Select - Input Source Select(RGB/DP)	
DOWN	Adjust button - OSD Menu Down - Moves the bar left to decrease the adjustment	
UP	Adjust button - OSD Menu UP - Moves the bar right to increase the adjustment	

2) Menu

Image	**Sub Menu : Brightness, Contrast, Sharpness, Color** Use the 'Adjust –' or 'Adjust +' button to decrease or increase the setting
Display	**Sub Menu : Auto Adjust, Phase, Clock, Display Position, Panel Select** Use the 'Adjust –' or 'Adjust +' button to decrease or increase the setting
System	**Sub Menu : Input Source, OSD Setting, Language, Dimming, Reset** Use the 'Adjust –' or 'Adjust +' button to adjust the settings automatically

Ⅴ. Environment Specifications

Parameter	Values		Units	Notes
	Min.	Max.		
Operating Temperature	0	+50	℃	
Storage Temperature	-20	+60	℃	
Operating Humidity	5	90	%RH	
Storage Humidity	5	90	%RH	

Ⅵ. Reliability

No.	Test Item		Conditions
1	High temperature operating test		Ta : 50℃, 120Hr
2	Low temperature operating test		Ta : 0℃, 120Hr
3	High temperature storage test		Ta : 60℃, 120Hr
4	Low temperature storage test		Ta : -20℃, 120Hr
5	High humidity operating test		Ta : 50℃, 80%RH, 120Hr
6	High humidity storage test		Ta : 50℃, 90%RH, 120Hr
7	Thermal shock operation test		Ta : 0℃, 60min → 0℃~50℃, 30min → 50℃, 60min, 50Cycle
8	Thermal shock storage test		Ta : -20℃, 60min → -20℃~60℃, 30min → 60℃, 60min, 50Cycle
9	ESD	Contact	8KV,1sec/cycle
		Air	15KV,1sec/cycle
10	Vibration (Non-Operation)		Linear sweep 30minutes, 10~200Hz 1.5G, X, Y, Z direction
11	Shock (Non-Operation)		50G, 20ms, Half-sine wave ±X, ±Y, ±Z

Ⅶ. Inspection standard

1. Description

These inspection standards shall be applied to LCD monitor supplied by GTT.

2. The condition of inspection

2.1 Inspection Environment

1) Ambient temperature : 15~25℃
2) Humidity : 25~75%RH
3) Ambient Illumination :
   400~600Lux for external appearance inspection
   100~200Lux for light on inspection

2.2 Inspection condition

- Viewing Distance : 30~50㎝ from the surface of the monitor.
- Viewing Angle : 90 degree to the front surface of display panel.
- Viewing Distance : 30㎝ from the surface of the monitor.
- Viewing Angle : 90 degree to the front surface of display panel.
- Inspection time for 15seconds.
- while the monitor is on the display and while running the Color patterns(White/Red/Green/Blue)
- Under the inspection condition above, we judge a failure in the inspection if stain or finger print are detected by naked eyes .

2.3 Inspection resolution

800×600, 60Hz

3. Visual inspection

3.1 Packing inspection

Item	Standard	Inspection equipment
Carton label	The character(Model, P/N, S/N etc…) can be discerned.	* Visual
Box	No broken and dirty	

3.2 Appearance inspection of monitor

Item	Standard	Inspection equipment
Rear & side	No crack, Broken and Distortion	* Visual * Calipers * Steel scale
Scratch	Noticeable scratch and exfoliation coating are not permitted	
Mounting hole	No omission	
Rear label	The character(Model, P/N, S/N etc…) can be discerned.	
Dimension and hole size	Tolerance : ± 0.2mm	

D

3.3 LCD visual inspection
[unit : mm]

Item	Standard		Inspection equipment
Dot (Bright & Dark)	Random	N≤ 6	* PC for inspection * Pattern generator * Lupe : ×10 * N-test program * ND Filter
	2 adjacent	N≤ 3 (Note 1)	
	3 adjacent or more	N≤ 2	
	Total	N≤ 10	
Mura(Note 4)	Judged by 2% ND filter in gray pattern		
Line defect	Not allowed		

* D : Diameter, W : Width, L : Length, N : Count

Note (1) Two dot adjacent

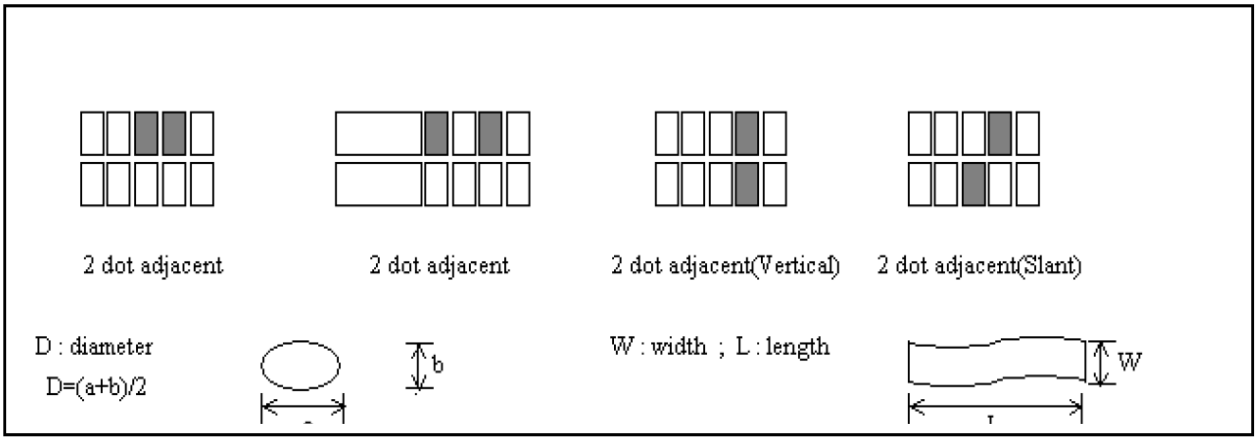

Note (4) The inspection method of ND filter – holding ND filter in front of the panel around 1cm
and examine the panel from 35±5cm in the front view for 3 seconds.

3.4 Touch glass & LCD Panel visual inspection

[unit ; mm]

Item	Defect size	Q'ty	Inspection equipment
Circular defect (Bubble, Scratch, Dig, Foreign object)	D≤0.2	Ignore	* Visual * Lupe ; ×10
	0.2<D≤0.5	12	
	0.5<D	0	
	Sum of defects	12	
Circular defect (Dimple, Stain)	D≤0.5	Ignore	
	0.5<D≤1.0	7	
	1.0<D	0	
Liner defect (Scratch, Foreign object)	W≤0.1, 1≤L≤10	5	
	0.1<W≤0.2, L≤10	3	
	0.2<W≤0.25, L≤5	1	
	W>0.25	0	
	Sum of defect	9	

D
*out-of-box cosmetic criteria within the viewing area while the touch sensor is on the display and while running the “Colors” program

* Inspection method
- Position front of touch screen 50cm form your eye.
- Inspection for 15seconds.
- Use one of the following patterns to aid eye.

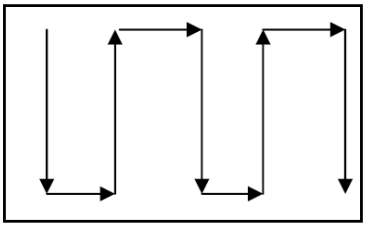

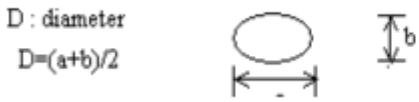

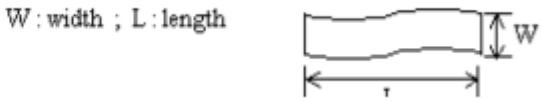

4. Function inspection (Resolution 800*600 at 60Hz)

4.1 OSD key function inspection

Item	Standard	Inspection equipment
Key function	Function normally each key button on the PC mode.	* PC

4.2 Display inspection

Item	Standard		Inspection equipment
Color	No strange color displaying		* PC * Pattern generator
Flicker	No flicker		
Noise	No critical noise		
Jittering	No critical jittering		
Power LED indicator	Power & signal on	Green	

4.3 Function inspection of touch screen

Item	Standard	Inspection equipment
Linearity Accuracy	X, Y axis: ± 3.0% or less	* Finger * Touch test program

Ⅷ. Accessory

1) VGA Cable

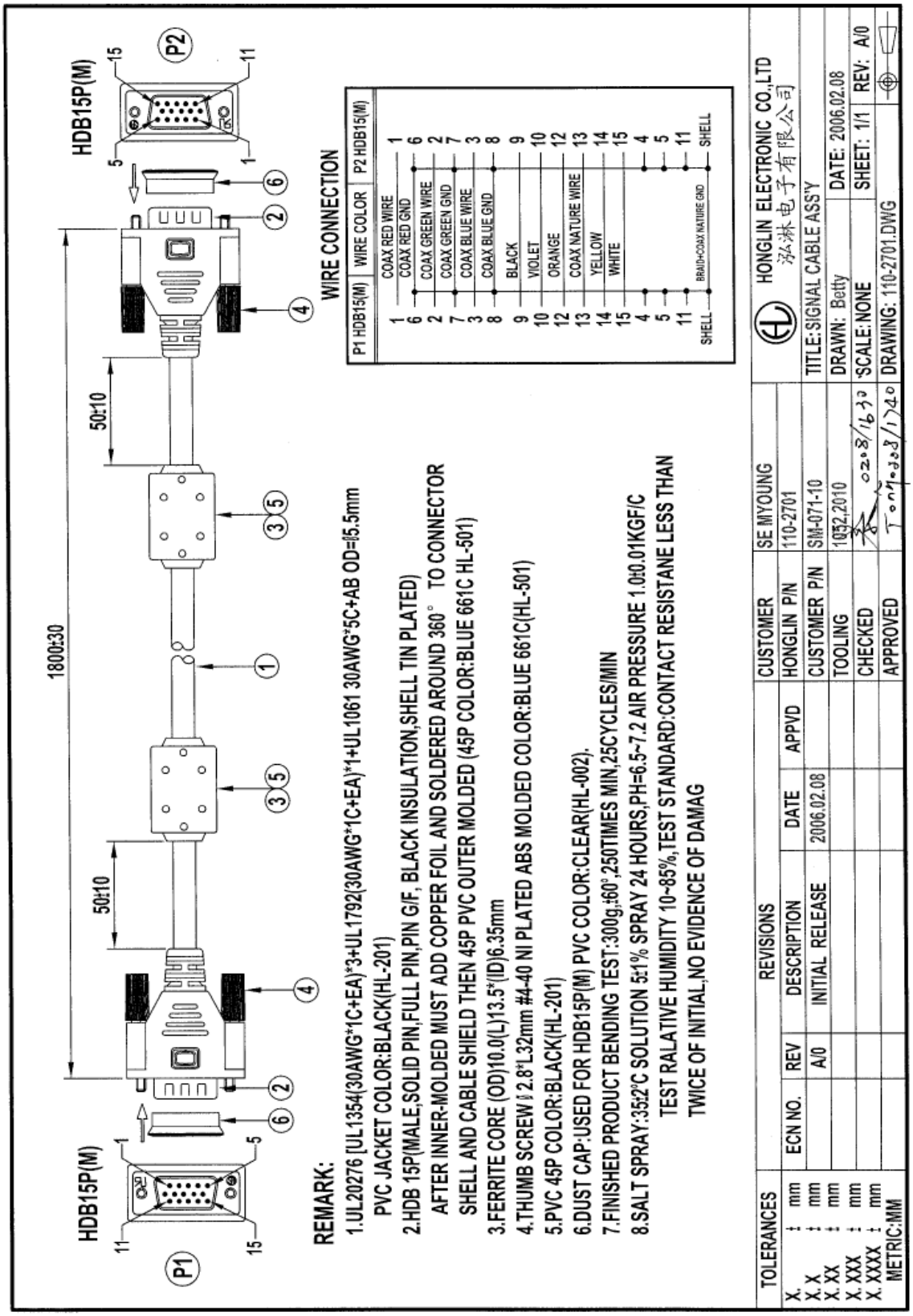

D

2) DVI Cable

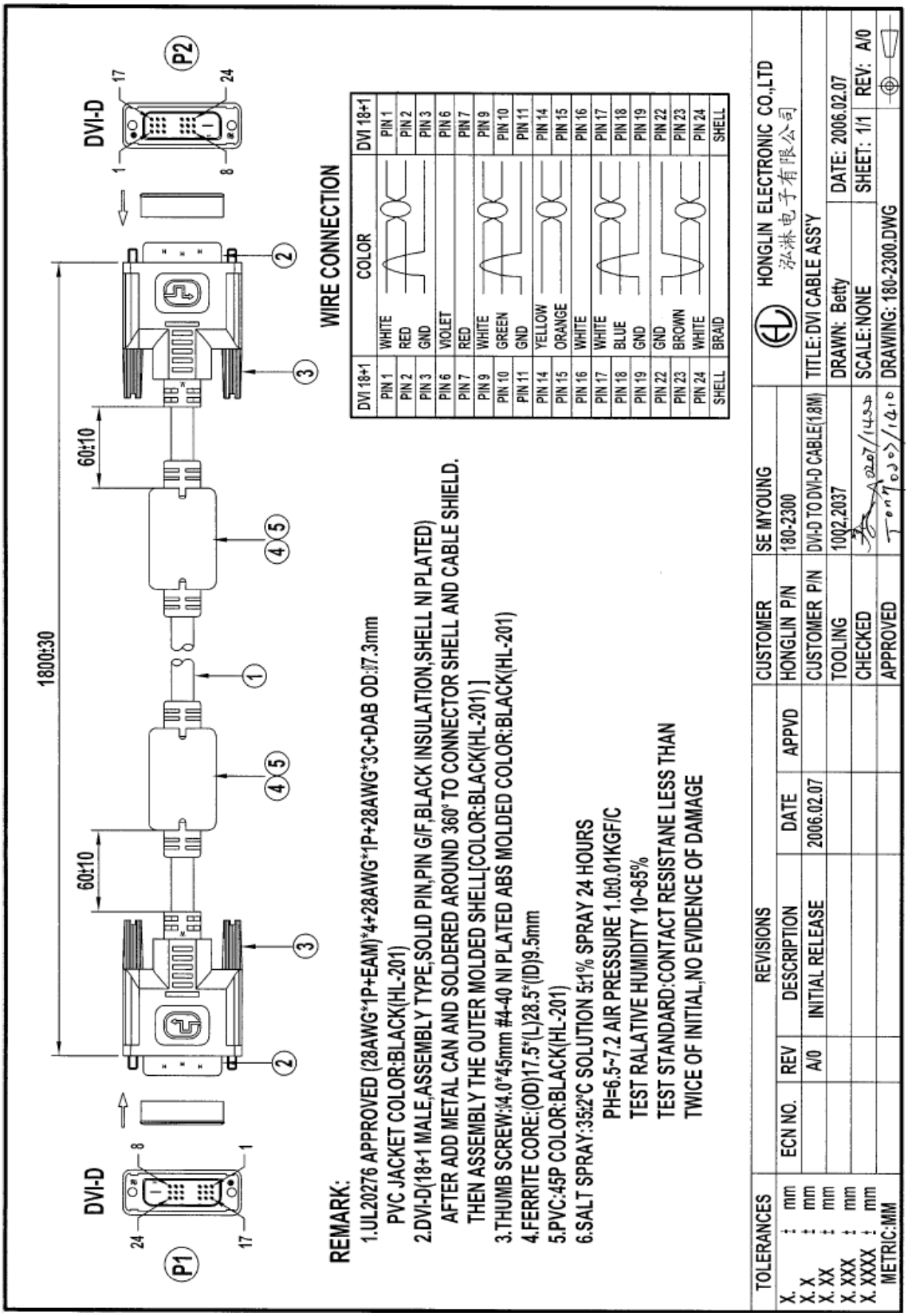
DVI-D
P1
P2
1800±30
60±10
60±10
WIRE CONNECTION
DVI 18+1 | COLOR | DVI 18+1
PIN 1 | WHITE | PIN 1
PIN 2 | RED | PIN 2
PIN 3 | GND | PIN 3
PIN 6 | VIOLET | PIN 6
PIN 7 | RED | PIN 7
PIN 9 | WHITE | PIN 9
PIN 10 | GREEN | PIN 10
PIN 11 | GND | PIN 11
PIN 14 | YELLOW | PIN 14
PIN 15 | ORANGE | PIN 15
PIN 16 | WHITE | PIN 16
PIN 17 | WHITE | PIN 17
PIN 18 | BLUE | PIN 18
PIN 19 | GND | PIN 19
PIN 22 | GND | PIN 22
PIN 23 | BROWN | PIN 23
PIN 24 | WHITE | PIN 24
SHELL | BRAID | SHELL
REMARK:
1.UL20276 APPROVED (28AWG*1P+EAM)*4+28AWG*1P+28AWG*3C+DAB OD:Ø7.3mm
PVC JACKET COLOR:BLACK(HL-201)
2.DVI-D(18+1 MALE,ASSEMBLY TYPE,SOLID PIN,PIN G/F,BLACK INSULATION,SHELL NI PLATED)
AFTER ADD METAL CAN AND SOLDERED AROUND 360° TO CONNECTOR SHELL AND CABLE SHIELD.
THEN ASSEMBLY THE OUTER MOLDED SHELL[COLOR:BLACK(HL-201)]
3.THUMB SCREW:Ø4.0*45mm #4-40 NI PLATED ABS MOLDED COLOR:BLACK(HL-201)
4.FERRITE CORE:(OD)17.5*(L)28.5*(ID)9.5mm
5.PVC:45P COLOR:BLACK(HL-201)
6.SALT SPRAY:35±2°C SOLUTION 5±1% SPRAY 24 HOURS
PH=6.5~7.2 AIR PRESSURE 1.0±0.01KGF/C
TEST RALATIVE HUMIDITY 10~85%
TEST STANDARD:CONTACT RESISTANE LESS THAN
TWICE OF INITIAL,NO EVIDENCE OF DAMAGE
TOLERANCES
X. ± mm
X.X ± mm
X.XX ± mm
X.XXX ± mm
X.XXXX ± mm
METRIC:MM
REVISIONS
ECN NO. | REV | DESCRIPTION | DATE | APPVD
A/0 | INITIAL RELEASE | 2006.02.07
CUSTOMER | SE MYOUNG
HONGLIN P/N | 180-2300
CUSTOMER P/N | DVI-D TO DVI-D CABLE(1.8M)
TOOLING | 1002.2037
CHECKED
APPROVED
HONGLIN ELECTRONIC CO.,LTD
TITLE:DVI CABLE ASS'Y
DRAWN: Betty
DATE: 2006.02.07
SCALE:NONE
SHEET: 1/1
REV: A/0
DRAWING: 180-2300.DWG

3) AC Cord

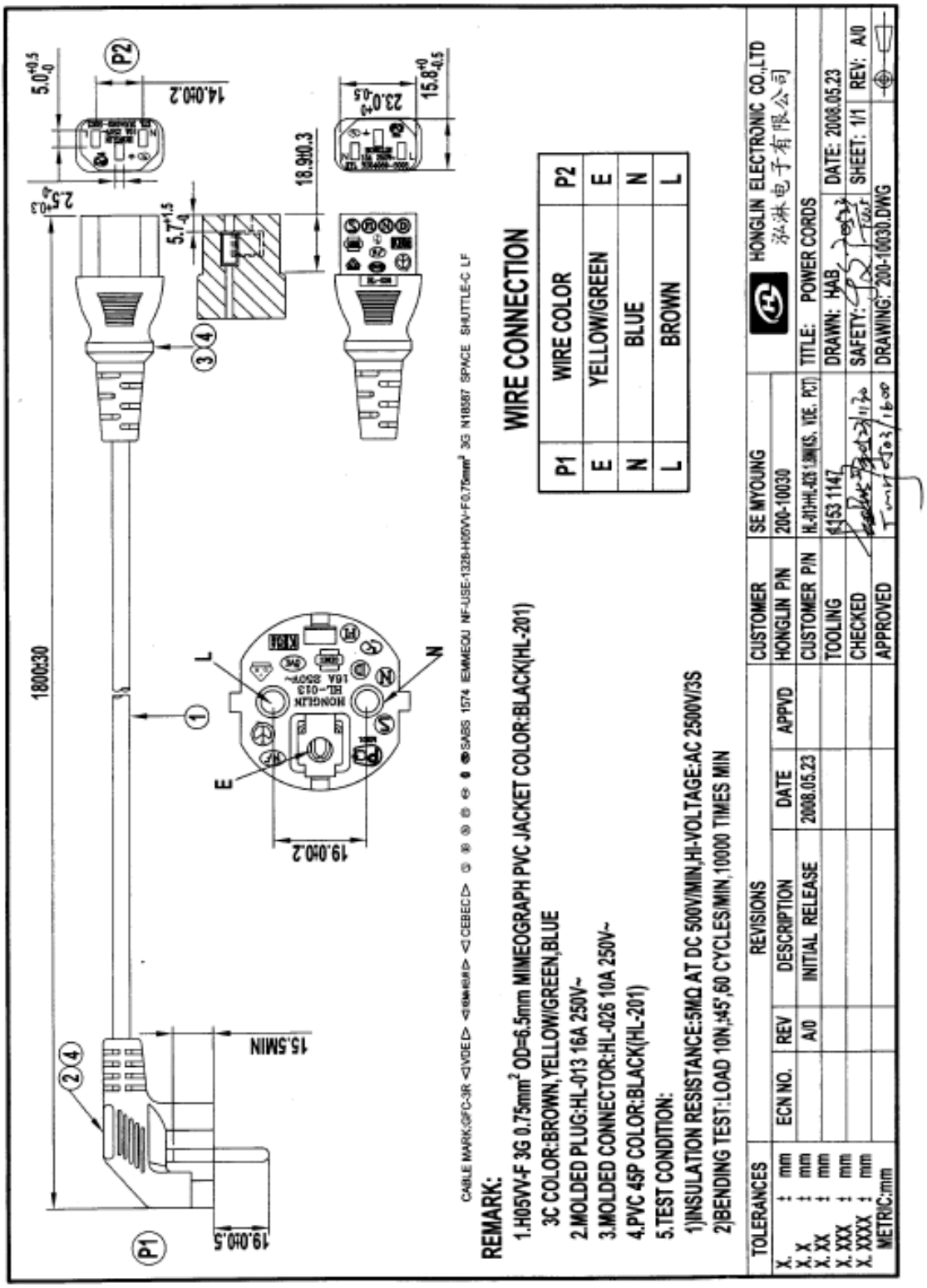
1800±30
15.5MIN
19.0±0.5
19.0±0.2
14.0±0.2
2.5
5.7
18.9±0.3
23.0
15.8
CABLE MARK:GFC-3R
REMARK:
1.H05VV-F 3G 0.75mm² OD=6.5mm MIMEOGRAPH PVC JACKET COLOR:BLACK(HL-201)
3C COLOR:BROWN,YELLOW/GREEN,BLUE
2.MOLDED PLUG:HL-013 16A 250V~
3.MOLDED CONNECTOR:HL-026 10A 250V~
4.PVC 45P COLOR:BLACK(HL-201)
5.TEST CONDITION:
1)INSULATION RESISTANCE:5MΩ AT DC 500V/MIN,HI-VOLTAGE:AC 2500V/3S
2)BENDING TEST:LOAD 10N,±45',60 CYCLES/MIN,10000 TIMES MIN
WIRE CONNECTION
P1 WIRE COLOR P2
E YELLOW/GREEN E
N BLUE N
L BROWN L
HONGLIN ELECTRONIC CO.,LTD
TITLE: POWER CORDS
DRAWN: HAB
DATE: 2008.05.23
SAFETY:
SHEET: 1/1
REV: A/0
DRAWING: 200-10030.DWG
REVISIONS
ECN NO. REV DESCRIPTION DATE APPVD
A/0 INITIAL RELEASE 2008.05.23
CUSTOMER
HONGLIN P/N 200-10030
CUSTOMER P/N
TOOLING
CHECKED
APPROVED
SE MYOUNG
TOLERANCES
METRIC:mm

D

4) USB Cable

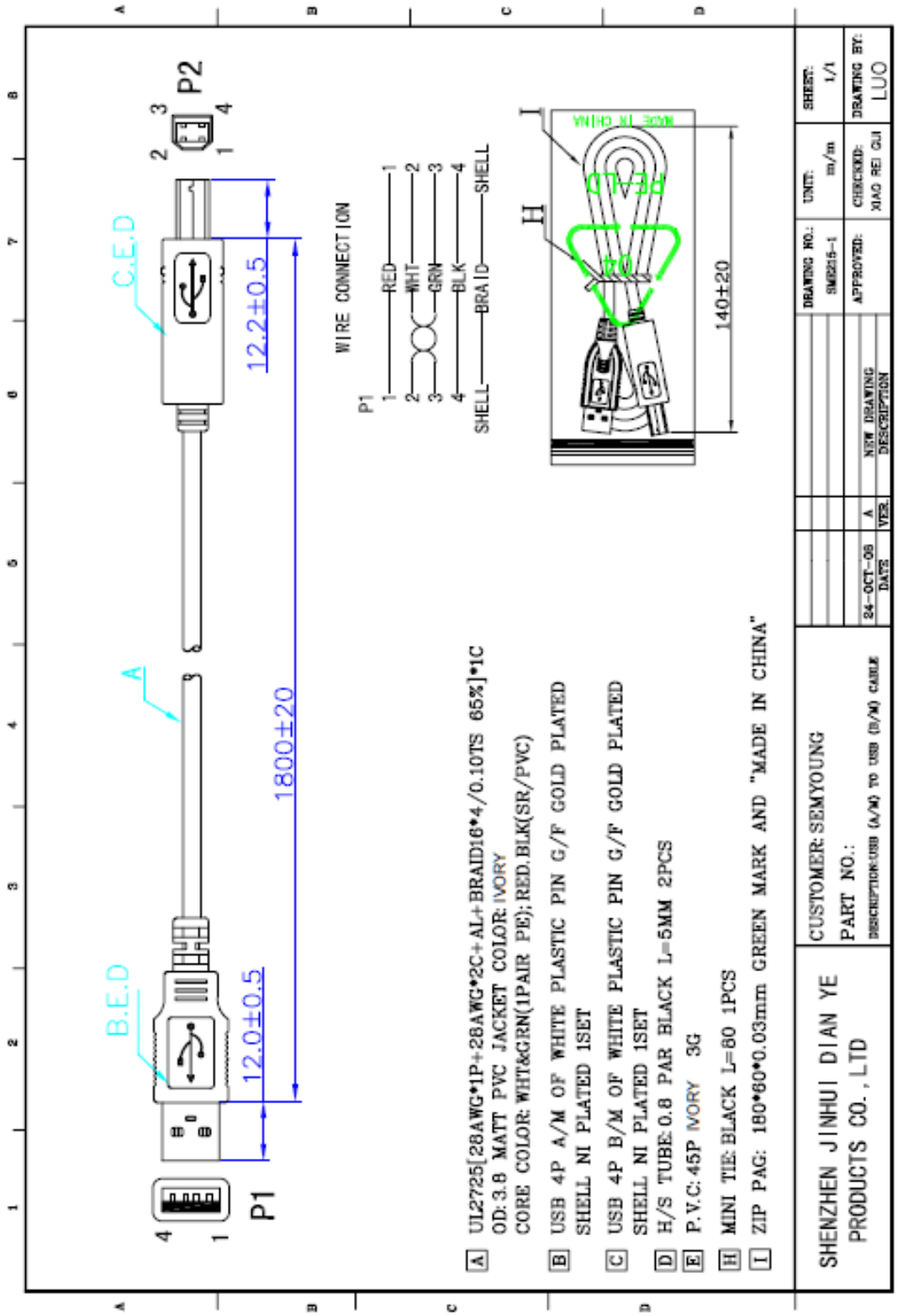
P2
C.E.D
12.2±0.5
A
1800±20
B.E.D
12.0±0.5
P1
WIRE CONNECTION
P1
RED
WHT
GRN
BLK
BRAID
SHELL
SHELL
H
I
MADE IN CHINA
140±20
A UL2725[28AWG*1P+28AWG*2C+AL+BRAID16*4/0.10TS 65%]*1C
OD:3.8 MATT PVC JACKET COLOR: IVORY
CORE COLOR: WHT&GRN(1PAIR PE);RED.BLK(SR/PVC)
B USB 4P A/M OF WHITE PLASTIC PIN G/F GOLD PLATED
SHELL NI PLATED 1SET
C USB 4P B/M OF WHITE PLASTIC PIN G/F GOLD PLATED
SHELL NI PLATED 1SET
D H/S TUBE:0.8 PAR BLACK L=5MM 2PCS
E P.V.C:45P IVORY 3G
H MINI TIE:BLACK L=80 1PCS
I ZIP PAG: 180*60*0.03mm GREEN MARK AND "MADE IN CHINA"
SHENZHEN JINHUI DIAN YE PRODUCTS CO.,LTD
CUSTOMER: SEMYOUNG
PART NO.:
DESCRIPTION:USB (A/M) TO USB (B/M) CABLE
DRAWING NO.: SM6215-1
UNIT: m/m
SHEET: 1/1
APPROVED:
CHECKED: XIAO REI GUI
DRAWING BY: LUO
24-OCT-06 DATE
A VER.
NEW DRAWING DESCRIPTION

D

5) Adaptor

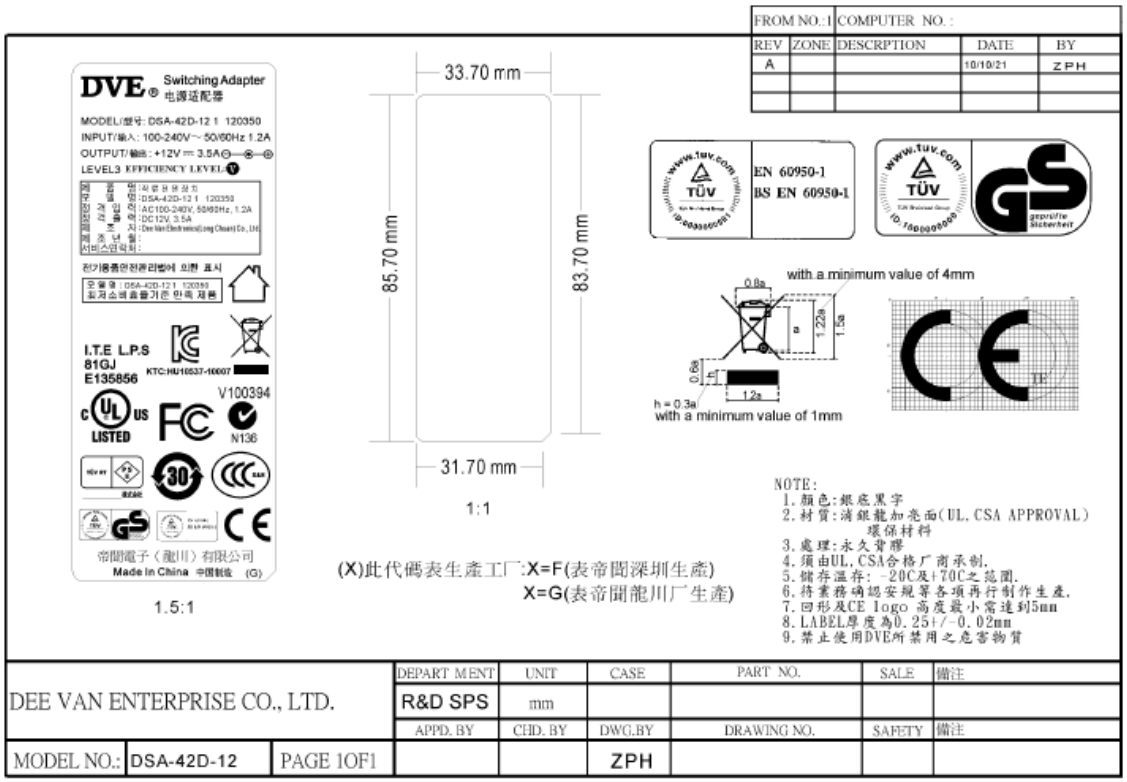
FROM NO.:1 COMPUTER NO. :
REV ZONE DESCRIPTION DATE BY
A 10/10/21 ZPH
DVE Switching Adapter
MODEL/型号: DSA-42D-12 1 120350
INPUT/输入: 100-240V~ 50/60Hz 1.2A
OUTPUT/输出: +12V 3.5A
LEVEL3 EFFICIENCY LEVEL
I.T.E L.P.S
81GJ
E135856
KTC:HU10537-10007
V100394
N136
LISTED
帝聞電子(龍川)有限公司
Made in China
1.5:1
33.70 mm
85.70 mm
83.70 mm
31.70 mm
1:1
EN 60950-1
BS EN 60950-1
with a minimum value of 4mm
h = 0.3a
with a minimum value of 1mm
(X)此代碼表生產工廠:X=F(表帝聞深圳生產)
X=G(表帝聞龍川厂生產)
NOTE:
1.顏色:銀底黑字
2.材質:清銀龍加亮面(UL,CSA APPROVAL)
環保材料
3.處理:永久背膠
4.須由UL,CSA合格厂商承制.
5.儲存溫存: -20C及+70C之范圍.
6.待業務确認安規等各項再行制作生產.
7.印形及CE logo 高度最小需達到5mm
8.LABEL厚度為0.25+/-0.02mm
9.禁止使用DVE所禁用之危害物質
DEE VAN ENTERPRISE CO., LTD.
DEPART MENT UNIT CASE PART NO. SALE 備注
R&D SPS mm
APPD. BY CHD. BY DWG.BY DRAWING NO. SAFETY 備注
MODEL NO.: DSA-42D-12 PAGE 1OF1 ZPH

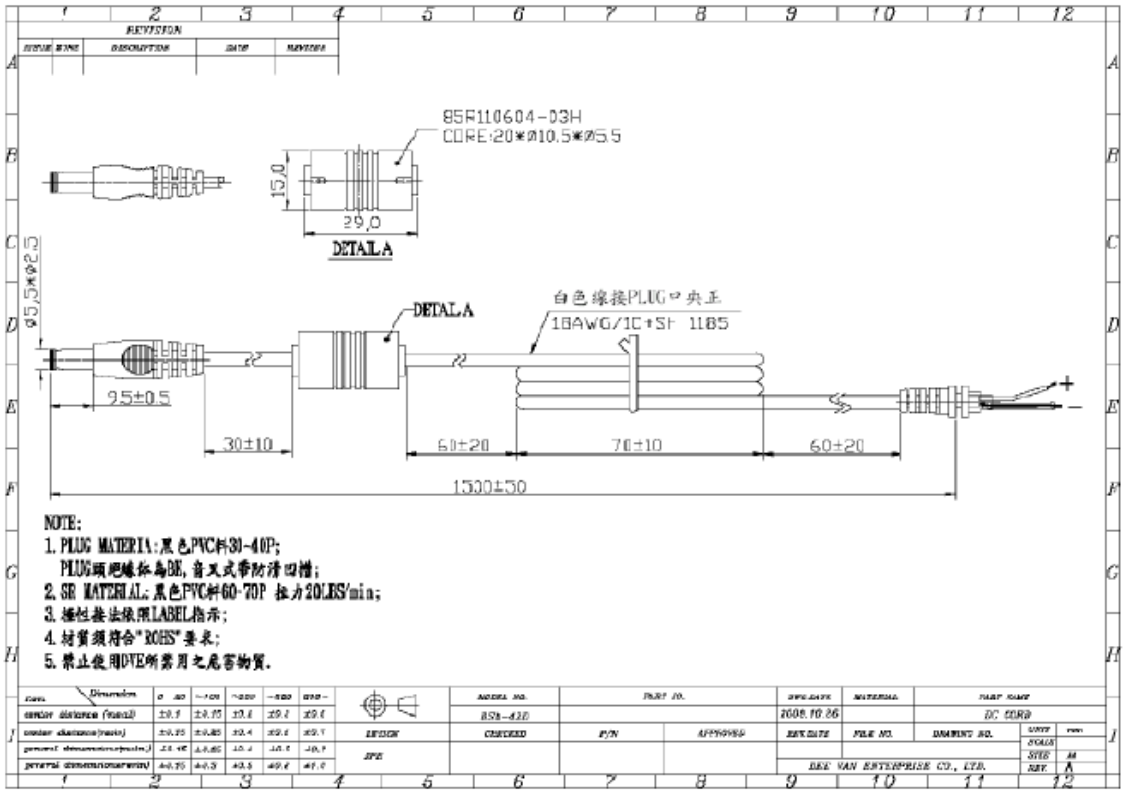
85F110604-03H
CORE:20*Ø10.5*Ø5.5
15.0
29.0
DETAIL A
Ø5.5*Ø2.5
白色線接PLUG中央正
18AWG/1C+SH 11B5
9.5±0.5
30±10
60±20
70±10
60±20
1500±50
NOTE:
1. PLUG MATERIA:黑色PVC#30-40P;
PLUG頭把線拉為DE,音叉式帶防滑凹槽;
2. SR MATERIAL:黑色PVC#60-70P 拉力20LBS/min;
3. 極性接法依照LABEL指示;
4. 材質須符合"ROHS"要求;
5. 禁止使用DVE所禁用之危害物質.
2008.10.26
DC CORD
DEE VAN ENTERPRISE CO., LTD.

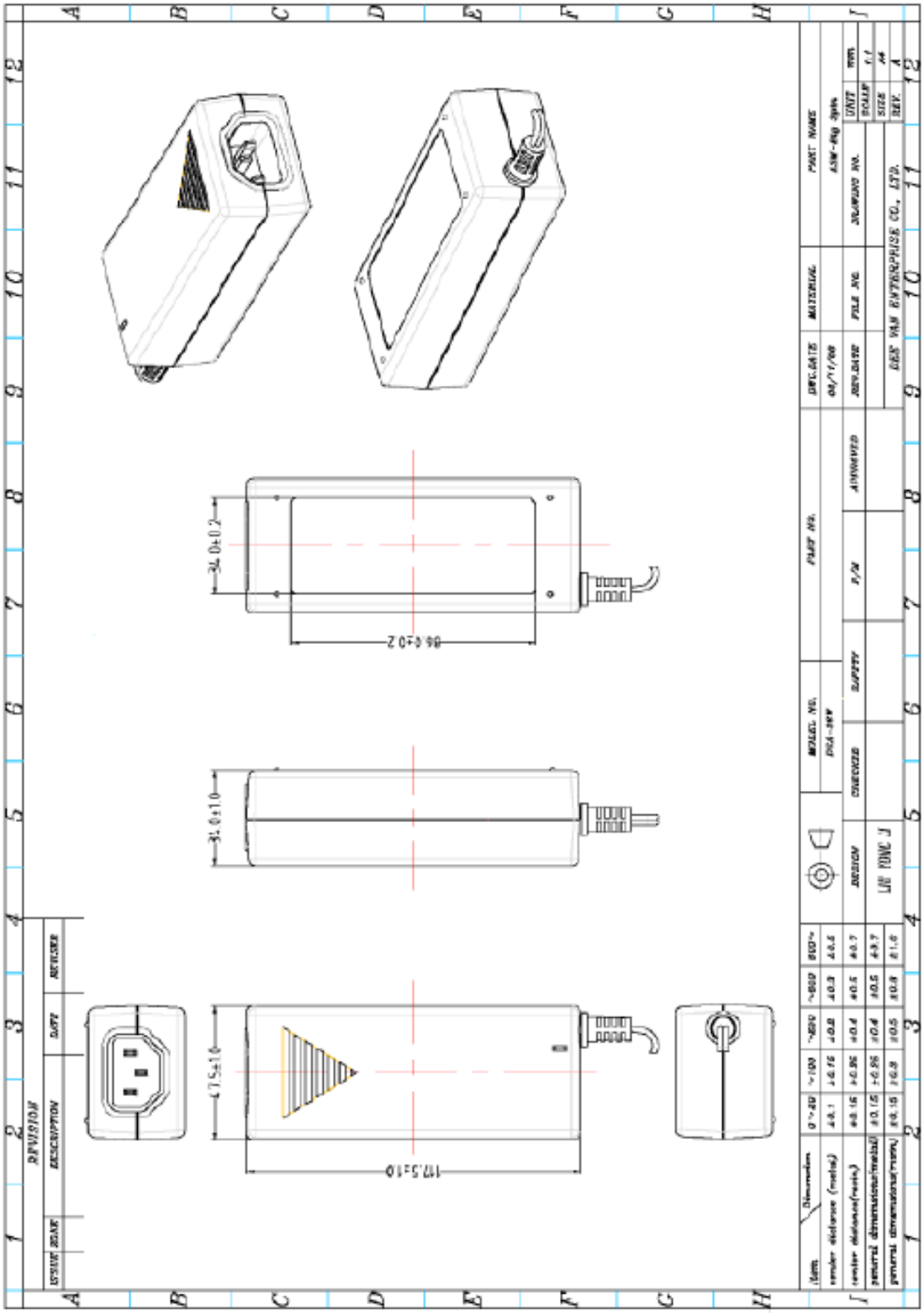
34.0±0.2
66.4±0.2
31.0±1.0
17.5±1.0
17.5±1.0
REVISION
DESCRIPTION
DATE
REVISER
PART NAME
MATERIAL
DWG. DATE
PART NO.
MODEL NO.
DRAWN
CHECKED
APPROVED
DRAWING NO.
FILE NO.
UNIT
SCALE
SIZE
REV.
LAN YANG JI

D

IX. Mechanical Characteristics

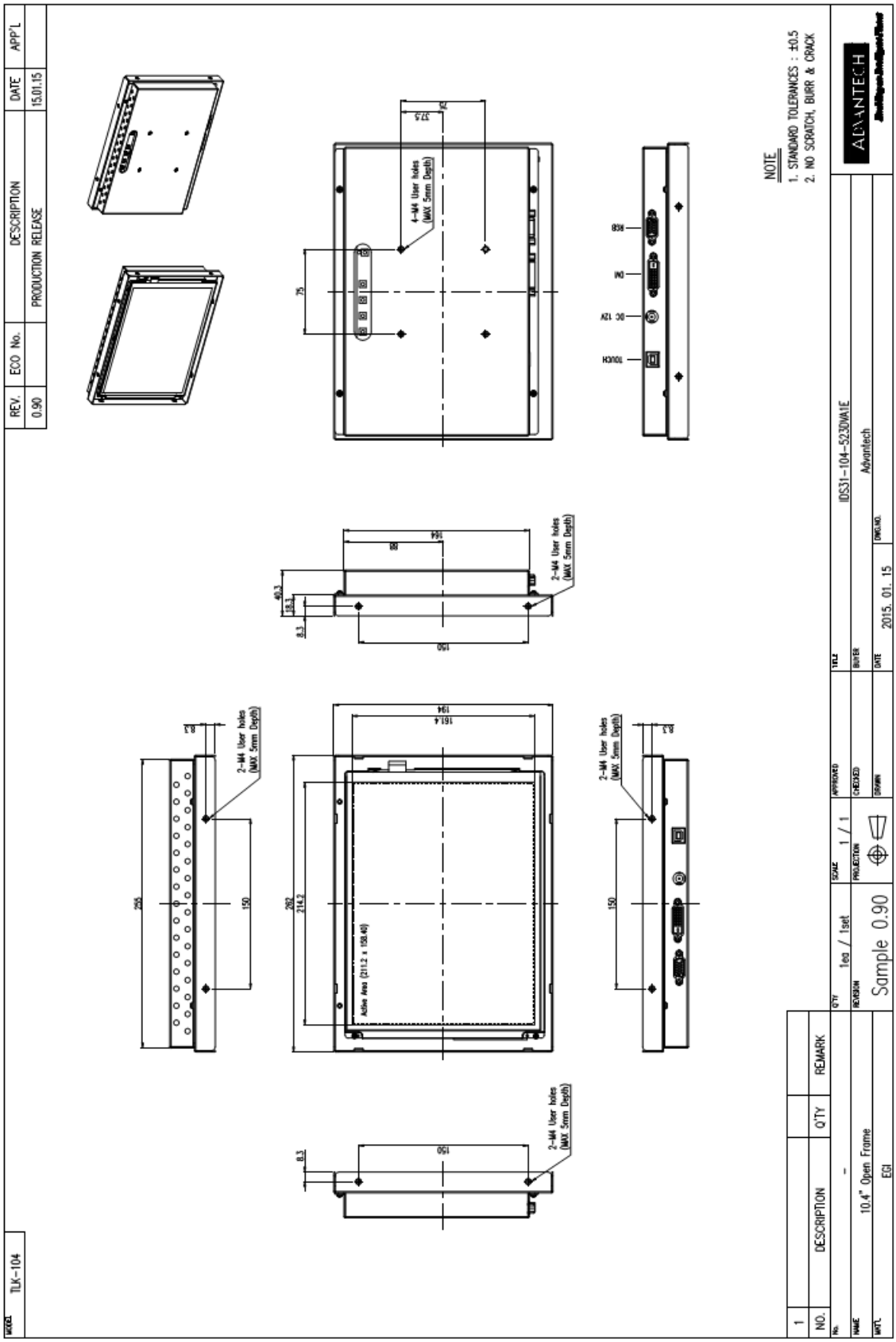

D

X. Packing

1) Packing Method

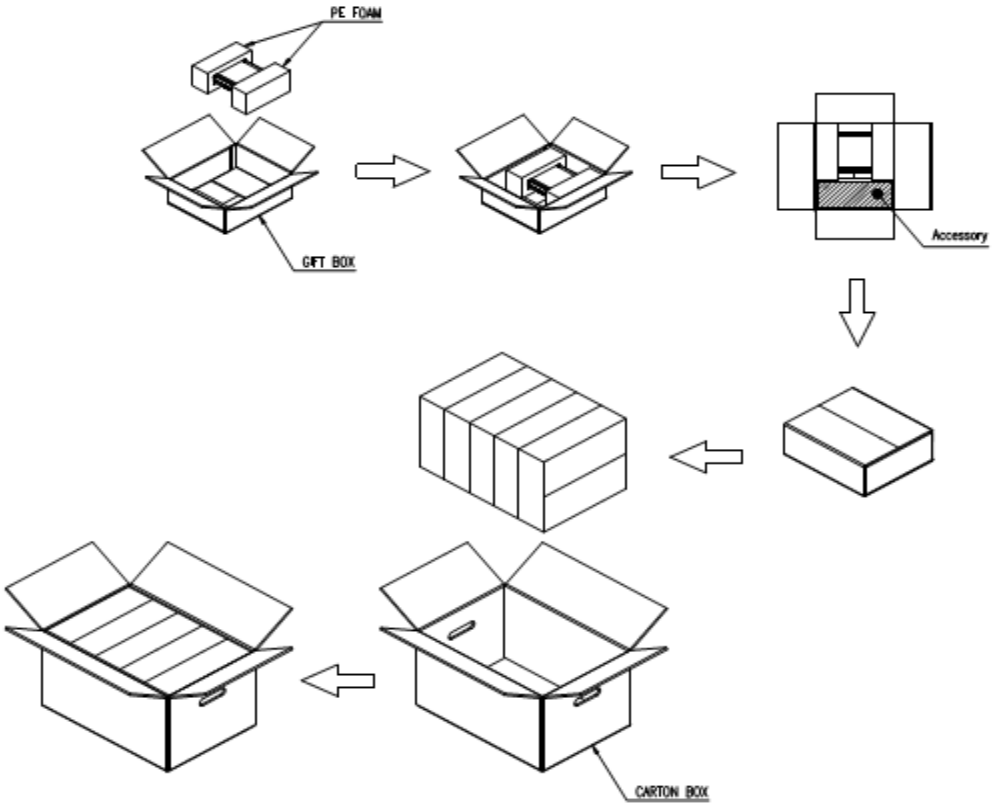

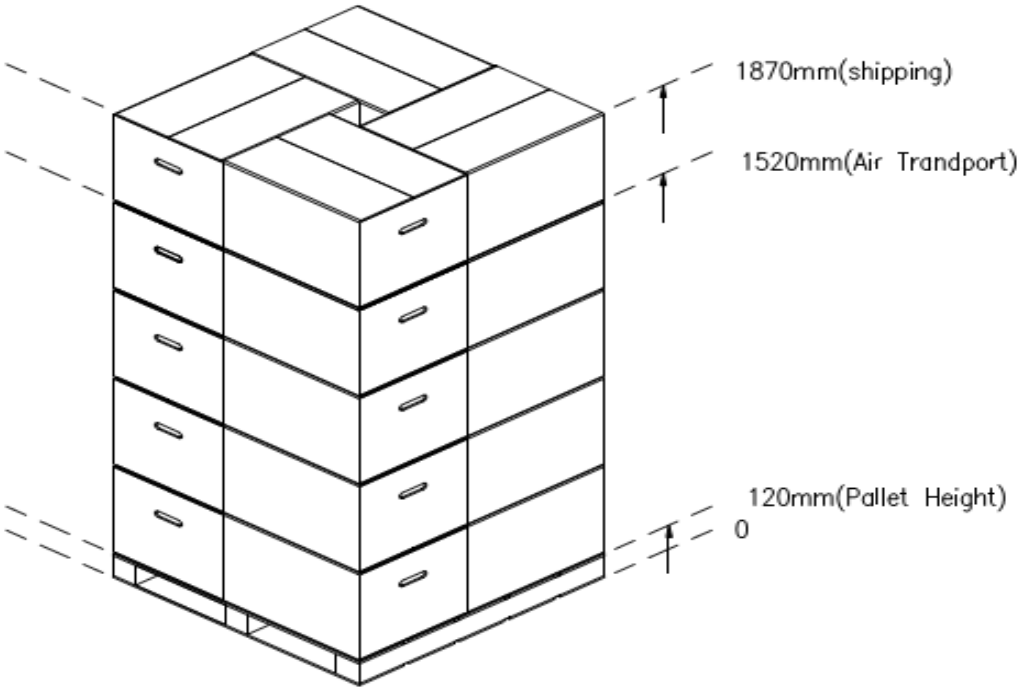

1 Carton / 5 Set

1 Pallet / 20 Carton / 100 Set (Shipping)